PBV

Threaded and Socketweld Ball Valves

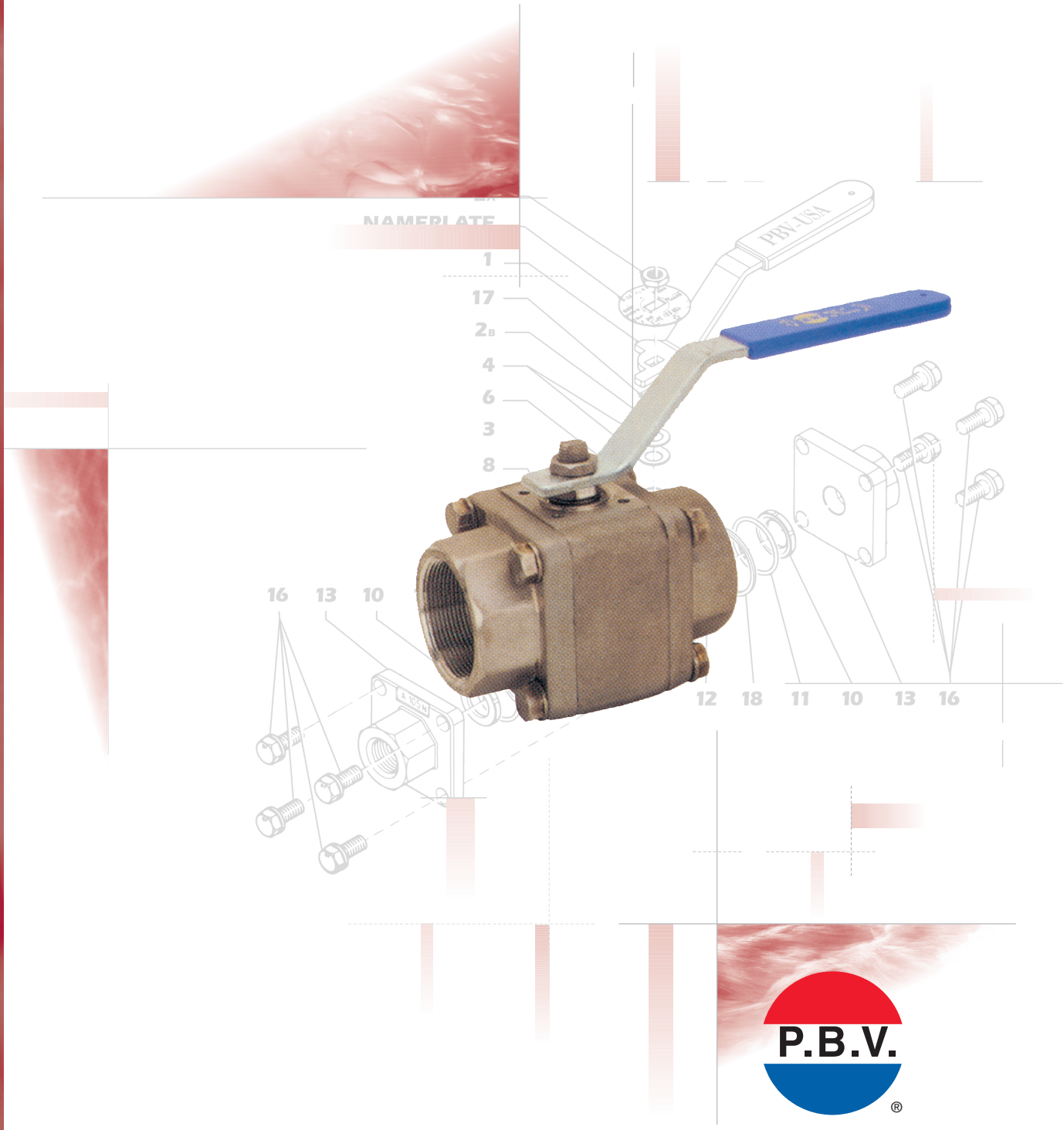

P.B.V.®

TABLE OF CONTENTS

Overview 3
How to Identify PBV-USA Valves 4
Seat Materials 5

Materials/Parts/Dimensions/Weights

Master Star - 5333/6333 6
Superstar - 5331/6331 8
Megastar - 6336 10
3-Way Multi-Port - 5338/6338 12
4-Way Multi-Port - 5339/6339 14
Port Configurations 17
Metal Seated 18

Temperature/Pressure Data

Master Star - 5333/6333 19
Superstar - 5331/6331 20
Megastar - 6336 22
3-Way Multi-Port - 5338/6338 23
4-Way Multi-Port - 5339/6339 (T or L-Port) 24
4-Way Multi-Port - 5339/6339 (X-Port) 25

Actuation Information

All Mounting – Per ISO 5211 26
Torque Charts 27

Their Options are Our Standards

Zy-Tech Global Industries has become an industry leader by providing both the highest quality and the broadest product package with PBV-USA Ball Valves. End users and distributors have come to rely on PBV-USA for their ball valve requirements, no matter the service conditions. Zy-Tech introduced the PBV-USA product package and built a "state-of-the-art" manufacturing facility in Stafford, Texas, to produce our product offering in close proximity to the heart of most industrial operations.

The PBV product line of threaded and socket-weld ball valves enhance the overall PBV-USA package by providing a versatile line of small diameter valves for all applications. The PBV package highlighted in this product brochure covers a wide spectrum of product innovations including in-line repairable, high pressure, metal seated, as well as specialty materials and accessories.

The unparalleled commitment to inventory coupled with the versatility of the PBV product line makes Zy-Tech Global Industries the right choice for your valve requirements. At Zy-Tech, we live by the motto "Their Options are Our Standards".

Size / Model Overview

Standard Port	Full Port	MasterStar Forged 3-Piece Fire Safe	SuperStar Forged 3-Piece Fire Safe	MegaStar Forged 3-Piece Fire Safe	3-Way Multi-Port Forged	4-Way Multi-Port Forged	
-	1/4″						
1/2″	3/8″						
3/4″	1/2″	No. 33	No. 31	No. 36	No. 38	No. 39	No. 39
1″	3/4″						
1 1/4″	1″			Full Bore Only			X-Port
1 1/2″	1 1/4″						
2″	1 1/2″						
2 1/2″	2″						
3″	2 1/2″						
4″	3″						

Maximum Pressure (WOG/CWP) Standard Seat Materials

Standard Port	Full Port	No.33 "M" Seat	No. 31 "M" Seat	No. 31 "D" Seat	No. 36 "D" Seat	No. 38 "M" Seat	No. 39 "M" Seat	No. 39 X-Port
-	1/4″	2000	2200	3000	6000	1500	1500	1200
1/2″	3/8″	2000	2200	3000	6000	1500	1500	1200
3/4″	1/2″	2000	2200	3000	6000	1500	1500	1200
1″	3/4″	2000	2200	3000	6000	1000	1000	1000
1 1/4″	1″	2000	2200	3000	6000	1000	1000	1000
1 1/2″	1 1/4″	2000	2000	2500	4000	800	800	750
2″	1 1/2″	2000	2000	2500	4000	800	800	750
2 1/2″	2″	-	1500	1800	4000	600	600	440
3″	2 1/2″	-	1500	1800	-	400	400	-
4″	3″	-	1000	1200	-	-	-	-

ANSI Class Ratings

Standard Port	Full Port	No.33	No. 31 "M" Seat	No. 31 "D" Seat	No. 36	No. 38	No. 39 "M" Seat	No. 39 X-Port
-	1/4″	900	900	900	2500	600	600	300
1/2″	3/8″	900	900	900	2500	600	600	300
3/4″	1/2″	900	900	900	2500	600	600	300
1″	3/4″	900	900	900	2500	300	300	300
1 1/4″	1″	900	900	900	2500	300	300	300
1 1/2″	1 1/4″	900	900	900	1500	300	300	300
2″	1 1/2″	900	900	900	1500	300	300	300
2 1/2″	2″	-	600	600	1500	150	150	150
3″	2 1/2″	-	400	400	-	150	150	-
4″	3″	-	400	400	-	-	-	-

HOW TO IDENTIFY PBV-USA, INC. BALL VALVES

The PBV-USA 5300/6300 series valve figure number is made up of significant numbers that fully describe all standard variations of the valve, with one additional optional modifier code to denote special service. Valve coding is as follows:

□ – □ □ □□ – □ □ – □□ □□ – □ □ – □ □

General Material	Port Configuration	Valve Type	Pressure Class	Fire Tested	End Connection	Body Material	Trim Material	Seat Material	Seal Material	NACE Option	Options
C Carbon Steel	**5** Standard	**3** Threaded and S/W Type	**31** Super Star	**0** Non-Fire Tested, No Emergency Seals	**5** BWE	**22** A105 WCB	**00** Same as Body	**D** Devlon	**L** Graphite	**N** NACE	**A** Actuated
S Stainless Steel	**6** Full		**33** Master Star	**3** Fire Tested with No Emergency Grease Seals	**7** Thr X SW	**25** LF2	**36** 316SS	**G** Gass Filled TFE	**V** Vitron®	**S** Standard	**B** Bare Stem
			36 Mega Star		**8** Threaded	**34** 304 SS	**71** Monel®	**K** KEL-F® TFE	**R** Low Temperature Buna-N		**E** Tee Handle for Insulation
			38 3-Way Multi-Port		**9** SW	**36** 316 SS CF8M		**M** 20% C 5% Graphite Filled TFE	**T** Teflon®		**I** ISO Mouting Pad
			39 4-Way Multi-Port					**P** Peek®	**Z** Special		**L** Lever
								R Delrin®			**V** Oval handle
								T Virgin TFE			
								U UHMWPE			
								V Viton®			
								Z Special			

Example:

S-6331-38-3600-ML-NL

This would be the appropriate figure number for an all stainless (316) full port, threaded type valve, series 31, fire tested, threaded end connections, 316 SS body material and trim, 20% C with 5% Graphite filled TFE seats, graphite seals, for use in NACE applications, lever operated.

PBV-USA 5300/6300 threaded and socketweld valves are designed to meet the following industry standards:

PRESSURE-TEMPERATURE VALVE SHELL	PRESSURE-TEMPERATURE SEATS-SEALS	SHELL WALL THICKNESS	PRESSURE TEST	FIRESAFE TEST
ASME/ ANSI B16.34	**SEE P-T RATINGS**	**ASME/ ANSI B16.34**	**SR 101/IT**	**BS 6755, API 607, API 6FA**

SEAT MATERIALS

Seat Description	Temp Range °C	Temp Range °F	Characteristics	Notes and Applications	Valve Model
B Reinforced PTFE Bronze Filled PTFE	-100/+270	-148/+518	medium pressure low/high temp	Perfect for steam applications	Master Star Super Star 3- and 4-ways
D DELRIN Acetal Resin	-70/+95	-94/+203	high pressure no temp	Hydrocarbons - NACE - $C0_2$ applications **NOT RECOMMENDED FOR OXYGEN**	Super Star Mega Star
E Vespel Polymide	-200/+260	-328/+500	high pressure high temp	Good chemical resistance **NOT RECOMMENDED FOR STEAM**	Super Star Mega Star
K KEL'F PCTFE	-196/+150	-319/+302	high pressure low temp	Similar to PTFE but with improved resistance to nitric acid, hydrofluoric acid, and liquic oxygen	Super Star Mega Star
N Nylon DEVLON V Polyamide - Nylon	-100/+155	-148/+311	high pressure medium/low temp	Hydrocarbons and NACE application. **NOT RECOMMENDED FOR GLYCOL AND METHANOL AS WELL AS WATER APPLICATIONS**	Super Star Mega Star
P PEEK Polyetherketone	-80/+220	-42/+428	high pressure high temp	Hydrocarbons - NACE Particularly indicated for tobacco and nuclear environment	Super Star Mega Star
R Reinforced PTFE	-60/+220	-51/+428	low pressure high cycle life	Higher pressure than virgin PTFE	Master Star Super Star 3- and 4-ways
S Reinforced PTFE 20% Carbon 5% Graphite	-190/+250	-310/+392	medium pressure low/high temp	Higher pressure and temperature than virgin PTFE	Master Star Super Star 3- and 4-ways
T Virgin PTFE	-196/+200	-319/+392	low pressure low torque	Mainly chemical - all services subject to temperature restrictions	Master Star Super Star 3- and 4-ways
U UHMWPE Polyethilene	-10/+80	-14/+176	low pressure low torque	Food and tobacco industries Nuclear environment	Master Star Super Star 3- and 4-ways

SOCKET-WELD END CONNECTIONS

Series 5333/6333 – MasterStar

These series offer the best possible design for socket-weld ends. The swing-out feature and seat arrangements make welding the ends into line virtually problem free, if the welder is following recommended welding practices. A copy of PBV welding procedures is available upon request.

Series 5331/6331 – SuperStar

The seat configuration and body construction make these series more difficult to weld into place without disassembling the valve or utilizing welding pup extensions available as standard from PBV. ***Zy-tech sales personnel and their distributors are instructed to not sell these series with socket-weld ends without first instructing the user about the problems associated with welding these in line.*** A repair kit is recommended for an additional charge when a user decides to try to weld these into line without extension pups.

- 2000 PSI
  (See PT Chart pg. 19)
- Carbon Filled TFE Seats; Grafoil® Packing
- Double Body Seals
- Fire Safe
- NACE

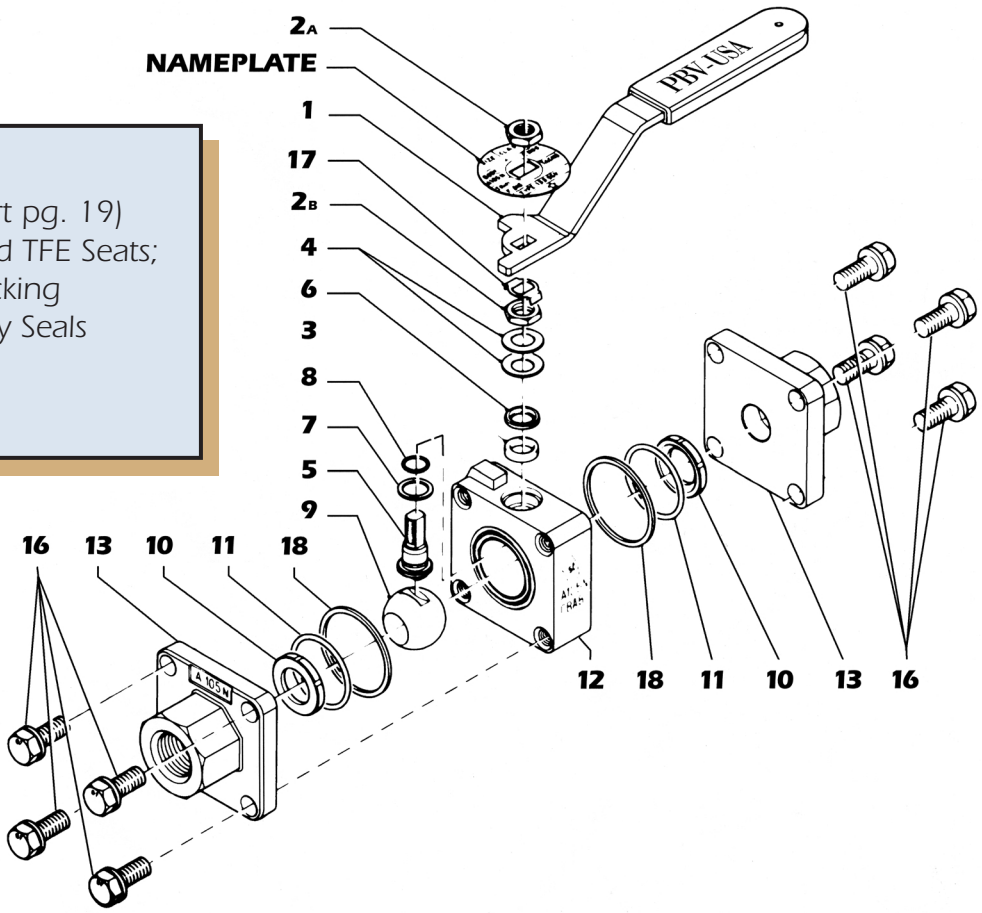

PART NO.	QTY.	PART NAME	MATERIAL A105	MATERIAL F316
1	1	Handle	C.S. Galvanized Plastic Cover	C.S. Galvanized Plastic Cover
2A/2B	2	Nut	C.S. Zinc Plated	S.S. 316
3	1	Packing Ring	Graphite	Graphite
4	2	Spring Washer	S.S. 302	S.S. 302
5	1	Antistatic Stem	S.S. 316	S.S. 316
6	1	Gland Follower	S.S. 316	S.S. 316
7	1	Thrust Washer	Reinforced PTFE	Reinforced PTFE
8	1	Stem "O" Ring	Viton®	Viton®
9	1	Ball	S.S. 316	S.S. 316
10	2	Seats	Reinforced PTFE	Reinforced PTFE
11	2	Body Seal	Viton®	Viton®
12	1	Body	ASTM A105N	ASTM A182 F316
13	2	End Connections	ASTM A105N	ASTM A182 F316L
14	1	Stop-Pin	Integral or C.S.	Integral or S.S.
16	8	Bolt	ASTM A193 B7M	ASTM A193 B8M
17	1	Stop Washer	S.S. 316	S.S. 316
18	2	Body Seal	Graphite	Graphite

5333/6333

Three piece bolted construction. 2000 PSI. Available in forged A105 and F316 body materials. 316 stainless steel ball and stem. Carbon filled TFE seats, Grafoil® packing, double body seals (Grafoil and PTFE). NACE MR-01-75. Fire safe – API 607. Full and reduced port. Threaded and socketweld end connections. ISO 5211 mounting pad available. Welded and integral nipples available as a factory option.

5333

Standard Port 1/2" – 2"

VALVE SIZE	DIMENSIONS						WEIGHT (Lbs.)
	A	B	C	D	E	F	
1/2"	3.00	2.64	6.00	.44	.39	.21	2.2
3/4"	3.15	2.76	6.00	.56	.39	.21	2.6
1"	3.95	3.15	7.60	.83	.47	.29	4.8
1 1/4"	4.35	3.62	7.60	1.00	.47	.29	6.8
1 1/2"	4.75	4.25	8.85	1.25	.59	.35	9.2
2"	5.50	4.45	8.85	1.50	.59	.35	12.1

*NPT or SW

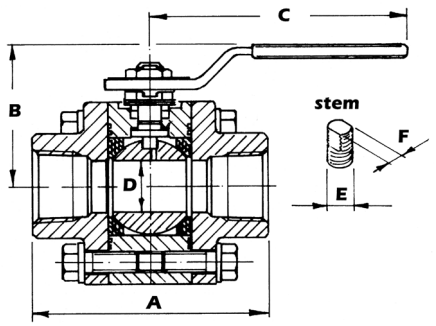

6333

Full Port 1/4" – 1 1/2"

VALVE SIZE	DIMENSIONS						WEIGHT (Lbs.)
	A	B	C	D	E	F	
1/4"	3.00	2.64	6.00	.44	.39	.21	2.4
3/8"	3.00	2.64	6.00	.44	.39	.21	2.2
1/2"	3.15	2.75	6.00	.56	.39	.21	2.8
3/4"	3.95	3.15	7.60	.83	.47	.29	5.0
1"	4.35	3.62	7.60	1.10	.47	.29	7.0
1 1/4"	4.75	4.25	8.85	1.25	.59	.35	9.5
1 1/2"	5.50	4.45	8.85	1.50	.59	.35	12.8

*NPT or SW

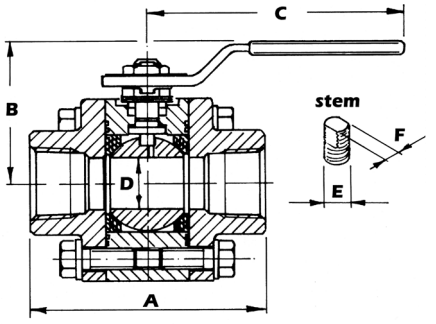

- 2000 & 3000 PSI (See PT Chart pg. 20 & 21)
- Sizes to 4" Reduced Port & 3" Full Port
- Encapsulated Seats
- Double Body Seals
- Fire Safe
- ISO 5211 Mounting Pad
- NACE

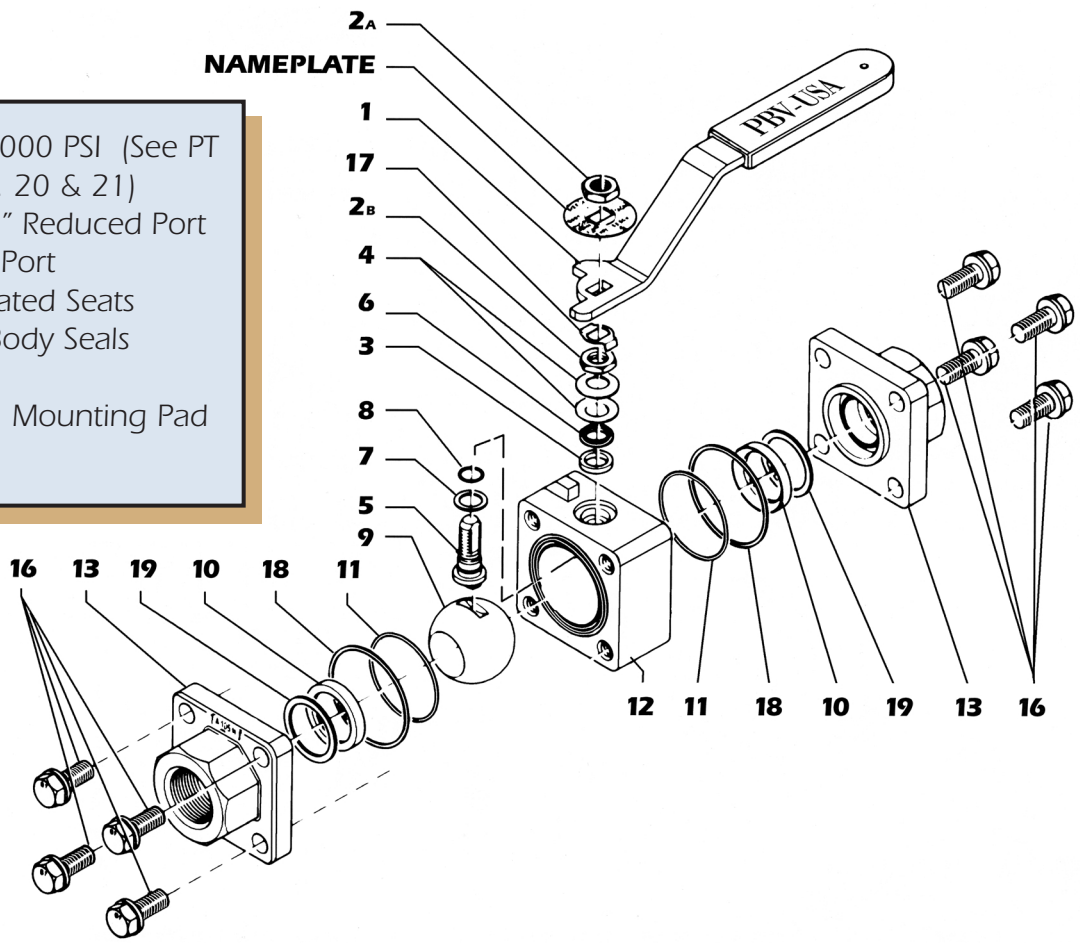

PART NO.	QTY.	PART NAME	MATERIAL A105	MATERIAL F316
1	1	Handle	C.S. Galvanized Plastic Cover	C.S. Galvanized Plastic Cover
2A/2B	2	Nut	C.S. Zinc Plated	S.S. 316
3	1	Packing Ring	Graphite	Graphite
4	2	Spring Washer	S.S. 302	S.S. 302
5	1	Antistatic Stem	S.S. 316	S.S. 316
6	1	Gland Follower	S.S. 316	S.S. 316
7	1	Thrust Washer	20% C 5% Graphite Filled TFE	20% C 5% Graphite Filled TFE
8	1	Stem "O" Ring	Viton®	Viton®
9	1	Ball	S.S. 316	S.S. 316
10	2	Seats	Reinforced PTFE	Reinforced PTFE
11	2	Body Seal	Viton®	Viton®
12	1	Body	ASTM A105N	ASTM A182 F316
13	2	End Connections	ASTM A105N	ASTM A182 F316L
14	1	Stop-Pin	Integral or C.S.	Integral or S.S.
16	8-12-16	Bolt	ASTM A193 B7M	ASTM A193 B8M
17	1	Stop Washer	S.S. 316	S.S. 316
18	2	Body Seal	Graphite	Graphite
19	2	Seat Ring	Reinforced TFE	Reinforced TFE

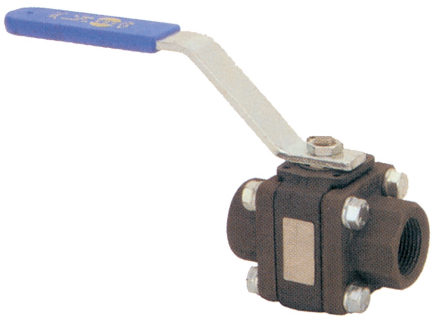

5331/6331

Three piece bolted construction. 2000 PSI. Available in forged A105 and F316 body materials. 316 stainless steel ball and stem. Carbon filled TFE seats, Grafoil® packing, double body seals (Grafoil and PTFE). NACE MR-01-75. Fire safe – API 607. Full and reduced port. Threaded and socketweld end connections. ISO 5211 mounting pad available. Welded and integral nipples available as a factory option.

5331

Standard Port 1/2" – 4"

VALVE SIZE	DIMENSIONS						WEIGHT (Lbs.)
	A	B	C	D	E	F	
1/2"	2.95	2.64	6.00	.44	.39	.21	2.2
3/4"	3.15	2.75	6.00	.56	.39	.21	2.6
1"	3.95	3.15	7.60	.83	.47	.29	4.8
1 1/4"	4.25	3.62	7.60	1.00	.47	.29	6.8
1 1/2"	4.75	4.25	8.85	1.25	.59	.35	9.2
2"	5.50	4.45	8.85	1.50	.59	.35	12.1
2 1/2"	5.55	4.65	8.85	1.95	.59	.35	19.8
3"	6.70	5.35	13.75	2.45	.87	.62	26.4
4"	9.00	5.90	19.70	3.00	.94	.70	35.2

*NPT or SW

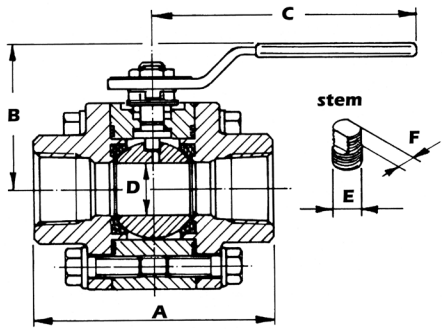

≤ 2.5" Socketweld end valves are supplied with either 4" integral or 6" welded nipple ends. Dimensions are not included on the above chart, however they are available upon request.

6331

Full Port 1/4" – 3"

VALVE SIZE	DIMENSIONS						WEIGHT (Lbs.)
	A	B	C	D	E	F	
1/4"	2.95	2.64	6.00	.44	.39	.21	2.4
3/8"	2.95	2.64	6.00	.44	.39	.21	2.2
1/2"	3.15	2.75	6.00	.56	.39	.21	2.8
3/4"	3.95	3.15	7.60	.83	.47	.29	5.0
1"	4.35	3.62	7.60	1.00	.47	.29	7.0
1 1/4"	4.75	4.25	8.85	1.25	.59	.35	9.5
1 1/2"	5.50	4.45	8.85	1.50	.59	.35	12.8
2"	5.55	4.65	8.85	2.00	.59	.35	22.0
2 1/2"	6.70	5.35	13.75	2.50	.87	.62	29.7
3"	12.00	5.90	19.70	3.10	.94	.70	38.5

*NPT or SW

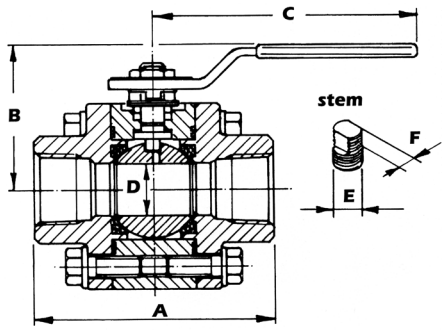

≤ 2.5" Socketweld end valves are supplied with either 4" integral or 6" welded nipple ends. Dimensions are not included on the above chart, however they are available upon request. Socketweld ends without nipple extensions will result in seat damage during welding for sizes smaller than 2 1/2" standard port and 2" full port.

- 6000 PSI
  (See PT Chart pg. 22)
- Encapsulated Seats
- Double Body Seals
- Fire Safe
- ISO 5211 Mounting Pad
- NACE

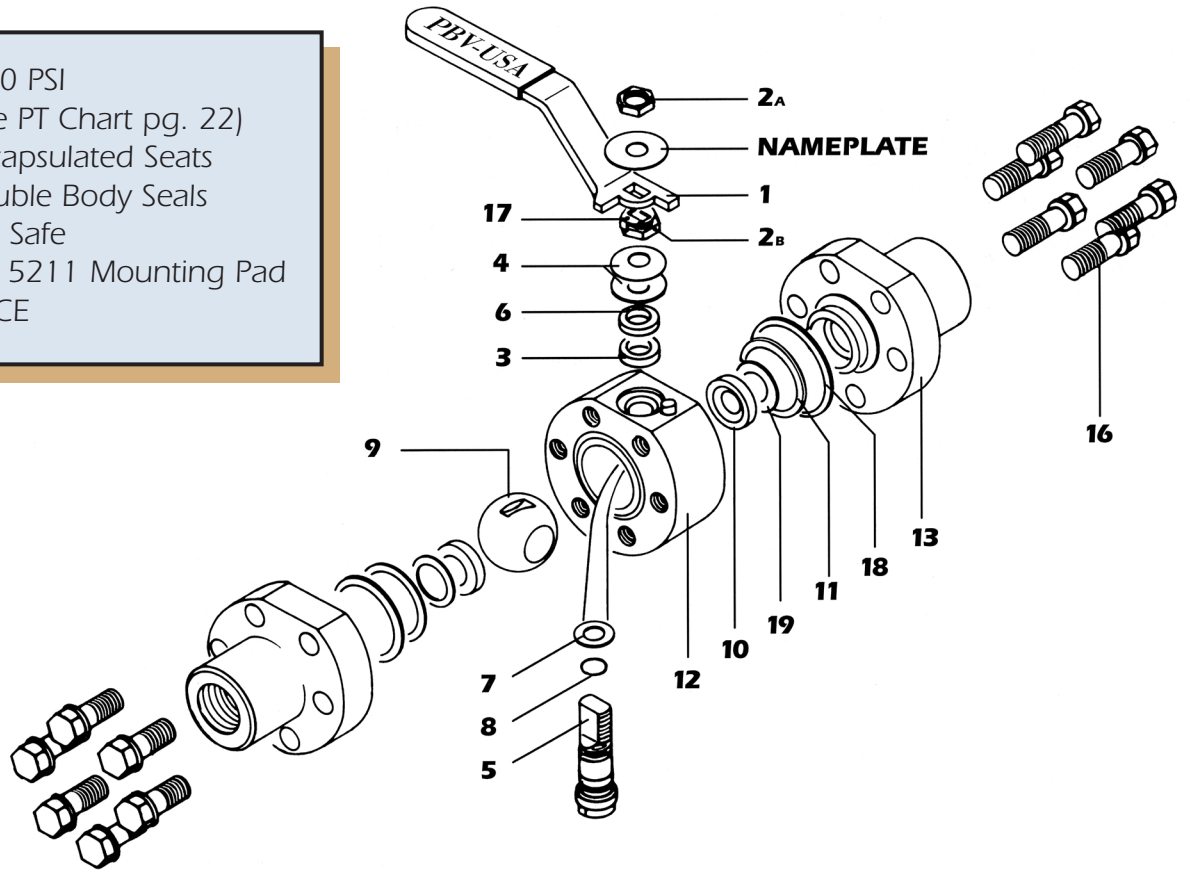

PART NO.	QTY.	PART NAME	MATERIAL A105	MATERIAL F316
1	1	Handle	C.S. Galvanized Plastic Cover	C.S. Galvanized Plastic Cover
2A/2B	2	Nut	C.S. Cadmium Plated	S.S. 316
3	1	Packing Ring	Graphite	Graphite
4	2	Spring Washer	Stainless Steel	Stainless Steel
5	1	Antistatic Stem	S.S. 316	S.S. 316
6	1	Gland Follower	S.S. 316	S.S. 316
7	1	Thrust Washer	Reinforced PTFE	Reinforced PTFE
8	1	Stem "O" Ring	Viton®	Viton®
9	1	Ball	S.S. 316	S.S. 316
10	2	Seats	Devlon-V	Devlon-V
11	2	Body Seal	Graphite	Graphite
12	1	Body	ASTM A105N	ASTM A182 F316
13	4	End Connections	ASTM A105N	ASTM A182 F316L
14	1	Stop-Pin	Carbon Steel	S.S. 304
16	6 + 6 8 + 8 10 + 10	Bolt	ASTM A193 B7M	ASTM A193 B8M
17	1	Stop Washer	Stainless Steel	Stainless Steel
18	3-4	Body Seal	Graphite	Graphite

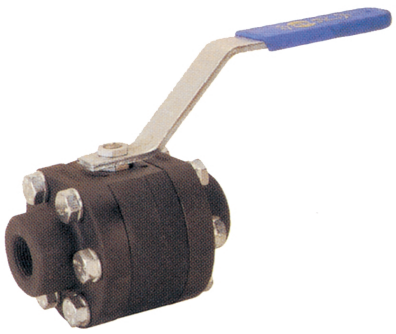

6336

Three piece bolted construction. 6000 PSI. Available in forged A105 and F316 body materials. 316 stainless steel ball and stem. Encapsulated Devlon seats. Grafoil® packing. Double body seals. NACE MR-01-75. Fire safe – API 607. Full port. Threaded ends. ISO 5211 mounting pad is provided as standard in valves 3/4" and larger.

Full Port 1/4" – 2"

VALVE SIZE	DIMENSIONS						WEIGHT	
	A (Threaded)	A (SW)	B	C	D	E	Threaded	SW
1/4"	4.00	8.50	3.35	7.60	.44	3.15	6.6	8.9
3/8"	4.00	8.50	3.35	7.60	.44	3.15	6.6	8.9
1/2"	4.00	8.50	3.35	7.60	.44	3.15	6.6	8.9
3/4"	5.00	9.00	3.75	7.60	.61	3.85	2.25	14.4
1"	5.50	10.00	4.33	8.85	.83	4.33	14.4	17.8
1 1/4"	6.70	11.00	5.50	13.75	1.34	5.32	30.0	36.5
1 1/2"	6.70	12.00	5.50	13.75	1.34	5.32	30.0	37.8
2"	7.85	14.50	5.90	13.75	1.70	5.90	41.0	52.2

*NPT or SW

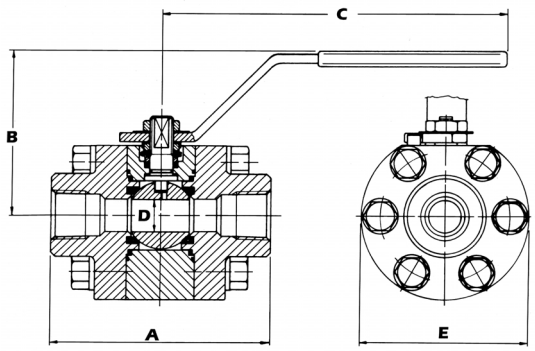

- 1500 PSI
  (See PT Chart pg. 23)
- T and L Port Configuration
- Double Body Seals
- ISO 5211 Mounting Pad
- NACE

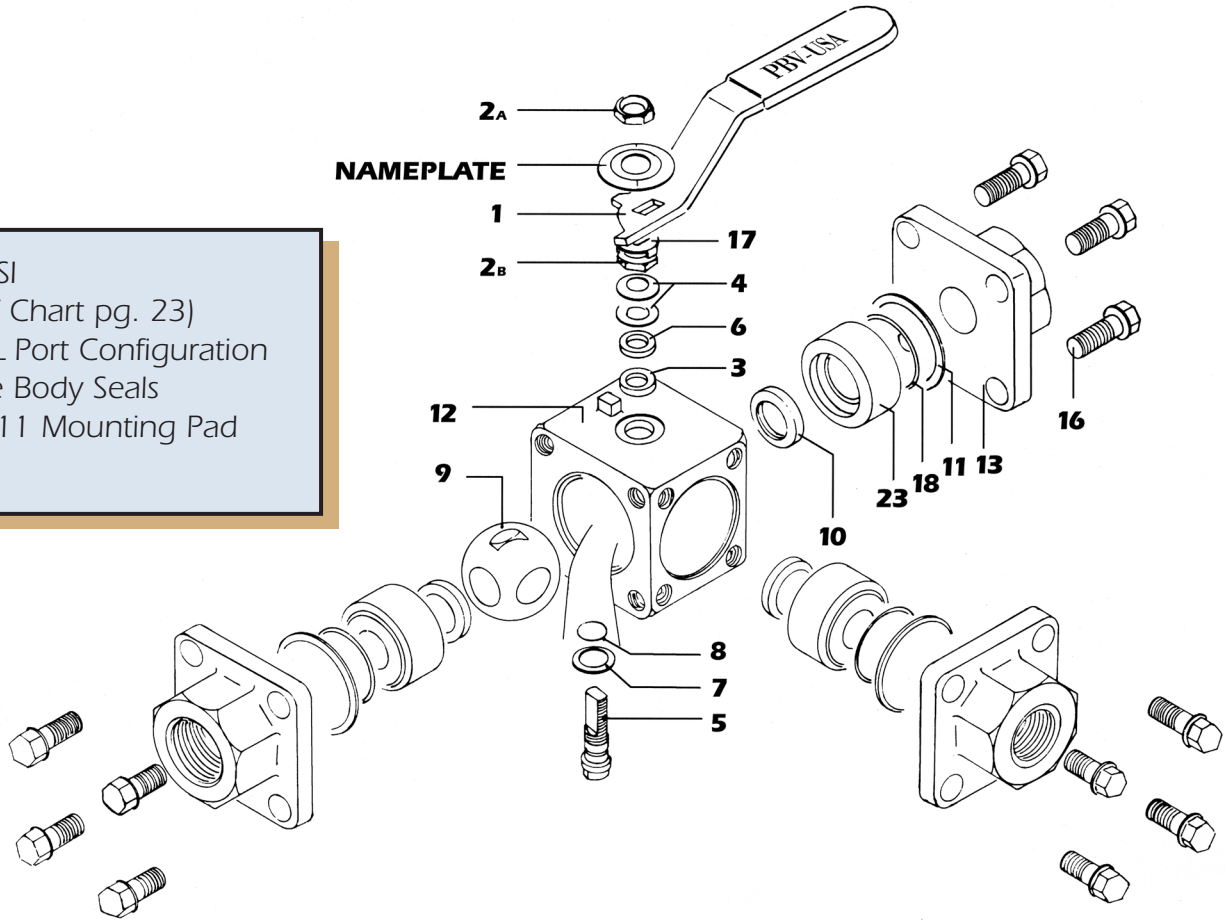

PART NO.	QTY.	PART NAME	MATERIAL A105/F316	MATERIAL F316/F316
1	1	Handle	C.S. Galvanized Plastic Cover	C.S. Galvanized Plastic Cover
2	1+1	Nut	C.S. Cadmium Plated	A 194 Gr. 8
3	1	Packing Ring	Graphite	Graphite
4	2	Spring Washer	S.S. 302	S.S. 302
5	1	Antistatic Stem	S.S. 316	S.S. 316
6	1	Gland Follower	ASTM A182 F316L	ASTM A182 F316L
7	1	Thrust Washer	Reinforced PTFE	Reinforced PTFE
8	1	Stem "O" Ring	Viton®	Viton®
9	1	Ball	ASTM A182 F316	ASTM A182 F316
10	4	Seats	Reinforced PTFE	Reinforced PTFE
11	2	Body Seal	Graphite	Graphite
12	1	Body	A105N	ASTM A182 F316
13	4	End Connections	A105N	ASTM A182 F316L
14	1	Stop-Pin	Carbon Steel	Stainless Steel
16	*	Bolt	ASTM A193 B7M	ASTM A193 B8M
17	1	Stop Washer	S.S. ASTM A182 F316	S.S. ASTM A182 F316
18	3-4	Body Seal	Viton®	Viton®
23	3-4	Seat Retainer	A105N	A182-F316

5338/6338

Bolted construction. Three-way. 1500 PSI (larger sizes have lower pressure ratings). Available in forged A105 and F316 body materials. 316 stainless steel ball and stem, carbon filled TFE seats. Grafoil® packing, double body seals. NACE MR-01-75. ISO 5211 mounting pad is provided as standard on this valve. Available in T and L port configurations.

5338

Standard Port 1/2" – 3"

VALVE SIZE	DIMENSIONS					WEIGHT (Lbs.)
	A(Threaded)	A(SW)	B	C	D	
1/2"	4.45	4.45	2.75	6.00	.44	5.0
3/4"	4.70	4.70	3.00	6.00	.56	6.6
1"	5.90	5.90	3.40	7.60	.83	11.0
1 1/4"	6.25	6.25	3.85	8.85	1.00	15.4
1 1/2"	7.15	7.15	4.45	8.85	1.25	22.0
2"	7.90	7.90	4.65	8.85	1.50	30.0
2 1/2"	10.30	11.90	5.30	16.54	1.93	121.0
3"	16.65	16.65	6.50	16.54	2.50	143.0

*NPT or SW

Configuration available: T8 - T2 - T3 - T4 - T5 - T6 - T7
L1 - L2 - L3

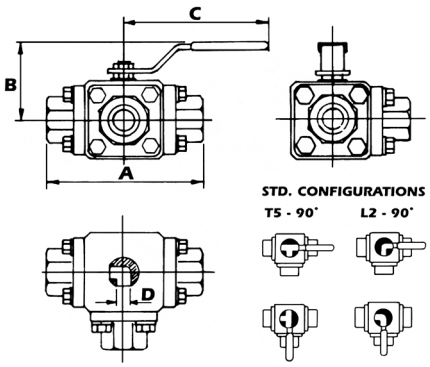

6338

Full Port 1/4" – 2 1/2"

VALVE SIZE	DIMENSIONS					WEIGHT (Lbs.)
	A(Threaded)	A(SW)	B	C	D	
1/4"	4.45	4.45	2.75	6.00	.44	5.0
3/8"	4.45	4.45	2.75	6.00	.44	5.0
1/2"	4.70	4.70	3.00	7.60	.56	6.6
3/4"	6.00	6.00	3.40	7.60	.83	11.0
1"	6.25	6.25	3.85	8.85	1.00	15.4
1 1/4"	7.20	7.20	4.45	8.85	1.25	22.0
1 1/2"	7.90	7.90	4.65	8.85	1.50	30.0
2"	10.30	11.90	5.30	16.54	1.93	121.0
2 1/2"	16.65	16.65	6.50	16.54	2.50	143.0

*NPT or SW

Configuration available: T8 - T2 - T3 - T4 - T5 - T6 - T7
L1 - L2 - L3

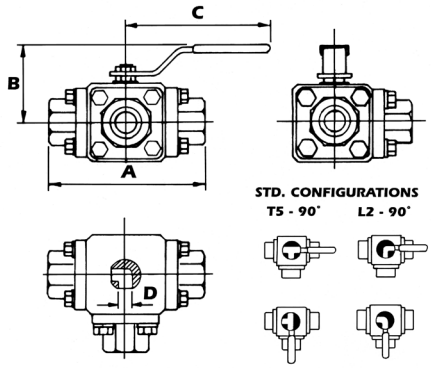

5339/6339

4-WAY MULTI-PORT

- 1500 PSI (See PT Chart pg. 24 & 25)
- T, L or X Port Configuration
- Double Body Seals
- ISO 5211 Mounting Pad
- NACE

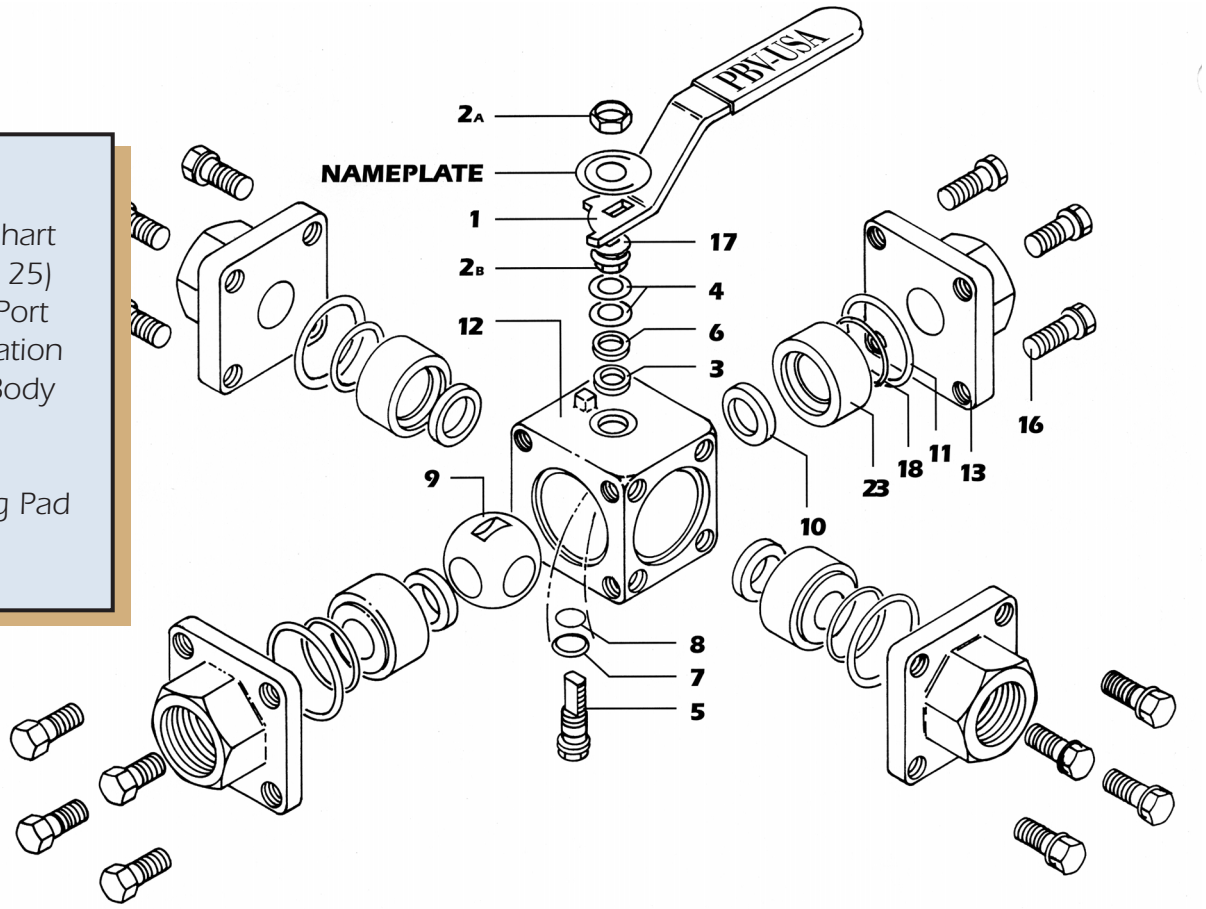

PART NO.	QTY.	PART NAME	MATERIAL A105/F316	MATERIAL F316/F316
1	1	Handle	C.S. Galvanized Plastic Cover	C.S. Galvanized Plastic Cover
2	1+1	Nut	C.S. Cadmium Plated	A 194 Gr. 8
3	1	Packing Ring	Graphite	Graphite
4	2	Spring Washer	S.S. 302	S.S. 302
5	1	Antistatic Stem	S.S. 316	S.S. 316
6	1	Gland Follower	ASTM A182 F316L	ASTM A182 F316L
7	1	Thrust Washer	Reinforced PTFE	Reinforced PTFE
8	1	Stem "O" Ring	Viton®	Viton®
9	1	Ball	ASTM A182 F316	ASTM A182 F316
10	4	Seats	Reinforced PTFE	Reinforced PTFE
11	2	Body Seal	Graphite	Graphite
12	1	Body	A105N	ASTM A182 F316
13	4	End Connections	A105N	ASTM A182 F316L
14	1	Stop-Pin	Carbon Steel	Stainless Steel
16	*	Bolt	ASTM A193 B7M	ASTM A193 B8M
17	1	Stop Washer	S.S. ASTM A182 F316	S.S. ASTM A182 F316
18	3-4	Body Seal	Viton®	Viton®
23	3-4	Seat Retainer	A105N	A182-F316

5339/6339

Bolted construction. Three-way. 1500 PSI (larger sizes have lower pressure ratings). Available in forged A105 and F316 body materials. 316 stainless steel ball and stem, carbon filled TFE seats. Grafoil® packing, double body seals. NACE MR-01-75. ISO 5211 mounting pad is provided as standard on this valve. Available in T and L port configurations.

5339 4-WAY MULTI-PORT (T or L)

Standard Port 1/2" – 3"

VALVE SIZE	DIMENSIONS					WEIGHT (Lbs.)
	A(Threaded)	A(SW)	B	C	D	
1/2"	4.45	4.45	2.75	6.00	.44	5.0
3/4"	4.70	4.70	2.95	7.60	.56	6.6
1"	5.90	5.90	3.40	7.60	.83	11.0
1 1/4"	6.25	6.25	3.85	8.85	1.00	15.4
1 1/2"	7.15	7.15	4.45	8.85	1.25	22
2"	7.90	7.90	4.65	8.85	1.55	30
2 1/2"	10.30	11.90	5.30	16.54	1.93	121.3
3"	16.65	16.65	6.50	16.54	2.51	143.3

*NPT or SW

Configuration available: T8 - L7

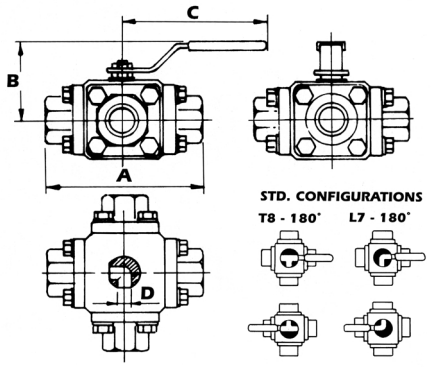

6339

Full Port 1/4" – 2 1/2"

VALVE SIZE	DIMENSIONS					WEIGHT (Lbs.)
	A(Threaded)	A(SW)	B	C	D	
1/4"	4.45	4.45	2.75	6.00	.44	5.0
3/8"	4.45	4.45	2.75	6.00	.44	5.0
1/2"	4.70	4.70	2.95	7.60	.56	6.6
3/4"	5.90	5.90	3.40	7.60	.83	11.0
1"	6.25	6.25	3.85	8.85	1.0	15.4
1 1/4"	7.15	7.15	4.45	8.85	1.25	22
1 1/2"	7.90	7.90	4.65	8.85	1.50	30
2"	10.30	11.90	5.30	16.54	1.93	121.3
2 1/2"	16.65	16.65	6.50	16.54	2.50	143.3

*NPT or SW

Configuration available: T8 - L7

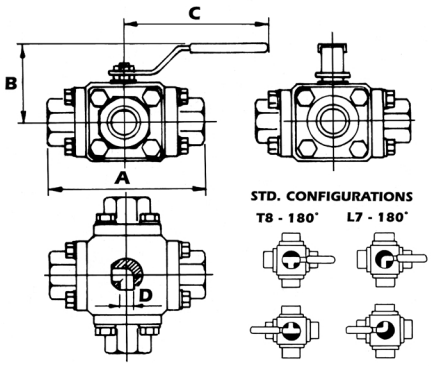

5339 4-WAY MULTI-PORT (X-PORT)

Standard Port 1/2″ – 3″

VALVE SIZE	DIMENSIONS					WEIGHT (Lbs.)
	A(Threaded)	A(SW)	B	C	D	
1/2″	4.70	4.70	2.95	7.60	.25	7.5
3/4″	5.90	5.90	3.40	7.60	.47	12.0
1″	6.25	6.25	3.85	8.85	.71	17.0
1 1/4″	7.20	7.20	4.45	8.85	1.10	23.5
1 1/2″	7.90	7.90	4.65	8.85	1.28	32.0
2″	10.30	11.90	5.30	16.54	1.34	125.0
2 1/2″	16.65	16.65	6.50	16.54	1.65	150.5

*NPT or SW

Configuration available: X

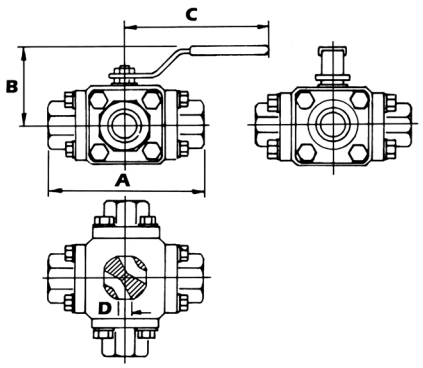

6339

Full Port 1/4″ – 2 1/2″

VALVE SIZE	DIMENSIONS					WEIGHT (Lbs.)
	A(Threaded)	A(SW)	B	C	D	
1/4″	4.70	4.70	2.95	7.60	.25	7.5
3/8″	4.70	4.70	2.95	7.60	.25	7.5
1/2″	5.90	5.90	3.40	7.60	.47	12.0
3/4″	6.25	6.25	3.85	8.85	.71	17.0
1″	7.20	7.20	4.45	8.85	.83	23.5
1 1/4″	7.90	7.90	4.65	8.85	1.10	32.0
1 1/2″	10.30	11.90	5.30	16.54	1.34	125.0
2″	16.65	16.65	6.50	16.54	1.65	150.5

*NPT or SW

Configuration available: X

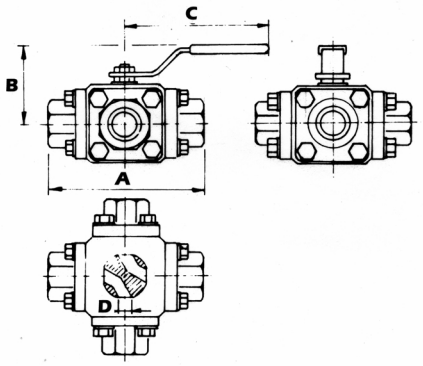

PORT CONFIGURATIONS FOR MULTI-PORT BALL VALVES

5338/6338

3-WAY T PORT

Standard Configuration	Other Configurations		
T6 - 90°	T4 - 90°	T3 - 90°	T5 - 90°

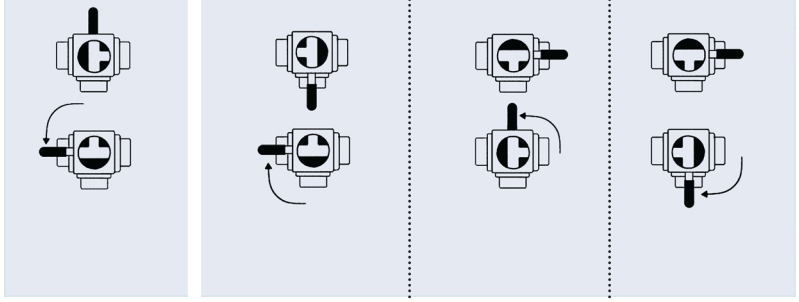

3-WAY T PORT

Other Configurations			
T1 - 180°	T2 - 180°	T9 - 180°	T7 - 180°

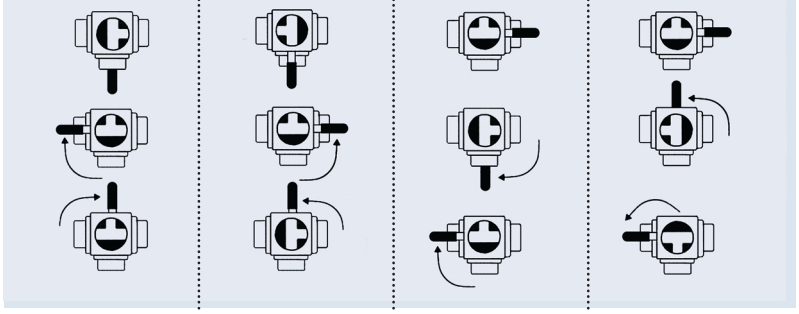

5338/6338

3-WAY L PORT

Standard Configuration	Other Configurations		Vertical "L"
L2 - 90°	L1 - 180°	L3 - 180°	L4 - 180°

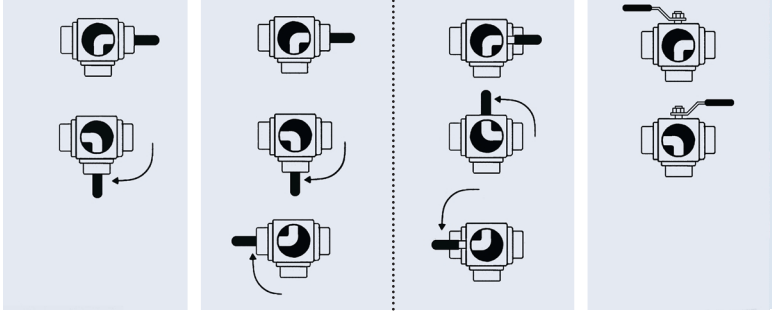

5339/6339

4-WAY PORT

"T" Port	"L" Port	"X" Port
T8 - 180°	L7 - 180°	X - 90°

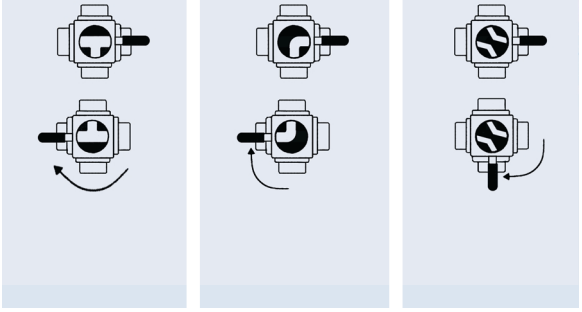

Metal Seated

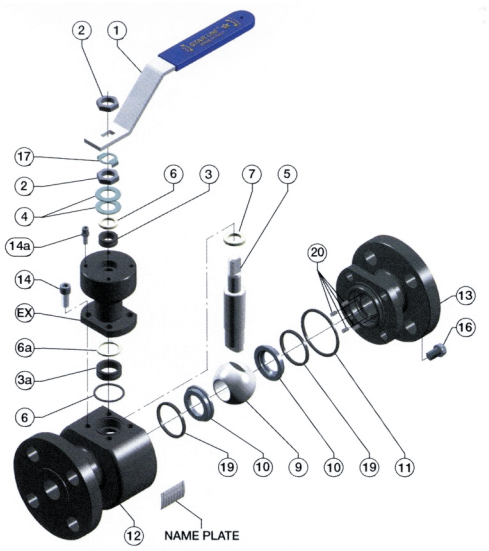

Part No	Unit Qty	Part Name	Materials A105/316	Materials LF2/316	Materials 316/316
NP	1	NAME PLATE	Stainless Steel	Stainless Steel	Stainless Steel
▪ G	1	EXTENSION GASKET	Graphite	Graphite	Graphite
▪ EX	1	EXTENSION	ASTM A105N	ASTM A350 LF2	ASTM A182 F316
1	1	HANDLE	Stainless Steel	Stainless Steel	Stainless Steel
▪▪ 2	2	HANDLE NUT	C.S. Zinc Plated	Stainless Steel	Stainless Steel
▪ 3	3+3	PACKING RING	Graphite	Graphite	Graphite
▪▪ 4	2	SPRING WASHER	Special S.S. for Springs	Special S.S. for Springs	Special S.S. for Springs
▪▪ 5	1	STEM	USN S31803	USN S31803	USN S31803
6	1+1	GLAND PACKING	Stainless Steel	Stainless Steel	Stainless Steel
▪▪ 7	1	THRUST WASHER	Stainless Steel	Stainless Steel	Stainless Steel
▪▪ 9	1	BALL	S.S. 316 Hardnet note 3	S.S. 316 Hardnet note 3	S.S. 316 Hardnet note 3
▪▪ 10	2	SEATS	S.S. 316 Hardnet note 3	S.S. 316 Hardnet note 3	S.S. 316 Hardnet note 3
▪ 11	2	BODY GASKET	Graphite	Graphite	Graphite
12	1	BODY	ASTM A105N	ASTM A305 L2	ASTM A182 F316
13	1	END CONNECTION	ASTM A105N	ASTM A305 L2	ASTM A182 F316
14	4	EXTENSION SCREW	Stainless Steel	Stainless Steel	Stainless Steel
14a	1	STOP PIN	Stainless Steel	Stainless Steel	Stainless Steel
16	nota 1	BOLTS	ASTM A193 B8	ASTM A193 B8	ASTM A193 B8
▪▪ 17	1	STOP WASHER	Stainless Steel	Stainless Steel	Stainless Steel
▪ 19	2	SEAT SEALS	Graphite	Graphite	Graphite
▪ 20	nota 2	SEAT SPRINGS	Inconel X-750	Inconel X-750	Inconel X-750

NOTE:
1) For size 1/4" to 1 1/2" n° 4 bolts - For size 2" n° 6 bolts.
2) For size 1/4" to 1 1/2" n° 4 springs - For size 2" n° 6 springs.
3) Surfaces are coated with tungsten carbide, chrome carbide, stellite 6 and other coatings on request.

▪ Suggested materials after 2 years service
▪▪ Suggested materials after 5 years service

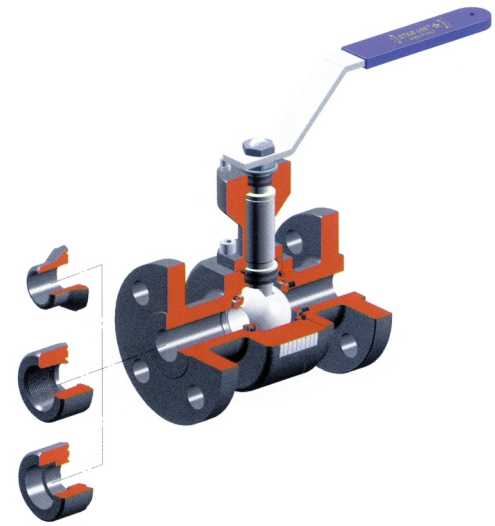

DESCRIPTION

CONSTRUCTION: Two pieces bolted construction • Anti blow out proof stem design • Solid ball and metal seats • Surfaces are coated with tungsten carbide, chrome carbide and stellite 6 Antistatic device • Fire safe design • ISO 5211 on the top for easy automation

SIZE: DN 8 ÷ 50 Full Bore -- DN 20 ÷ 80 Reduced Bore
1/4" ÷ 2" Full Bore -- 3/4" ÷ 3" Reduced Bore

CLASS: PN16 ÷ 100 or ASME 150 ÷ 600 lbs.

TEMPERATURE: -40° F up to +1000° F

DESIGN: ASME B16.34 - BS5351 - API 6D

MARKING: MSS SP25

TEST CERTIFICATE: UNI EN 10204 Type 3.1B unless otherwise required

SERVICES: For extreme temperature, abrasive and corrosive service

END CONNECTIONS: Threaded, socketweld, buttweld or flanged

Pressure Limitations for M-Seat

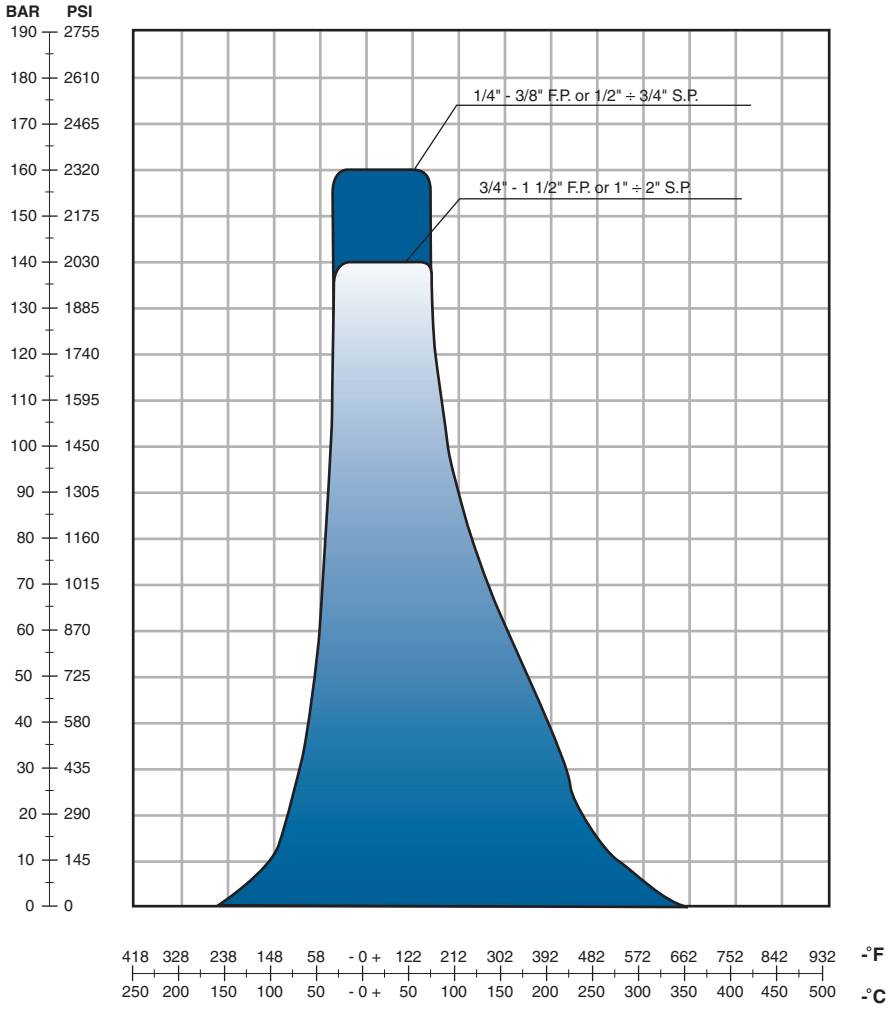

CV VALUES

Standard Port

SIZE	–	1/2″	3/4″	1″	1 1/4″	1 1/2″	2″	2 1/2″	3″	4″
Cv		8	13	32	48	82	120	275	460	700

Full Port

SIZE	1/4″	3/8″	1/2″	3/4″	1″	1 1/4″	1 1/2″	2″	2 1/2″	3″0
Cv	8	8	12	30	45	78	115	265	445	680

SOFT PARTS

Repair Kit

P/N	QTY.	PART NAME	MATERIAL
3	1	Packing Ring	Graphite
7	1	Thrust Washer	RPTFE
8	1	Stem "O" Ring	Viton©
10	2	Seats	20% C – 5% Gr. Filled TFE
11	2	Body Seals	Carbon Filled TFE
18	2	Body Seals	Graphite

FLOW DATA Flow rates were determined for ball valves in fully open position and a water temperature of 60ºF (15ºC). Cv value is the full capacity flow rate through the ball valve in gallons/min. of water at 60ºF with a pressure of one PSI.

Pressure Limitations for M-Seat

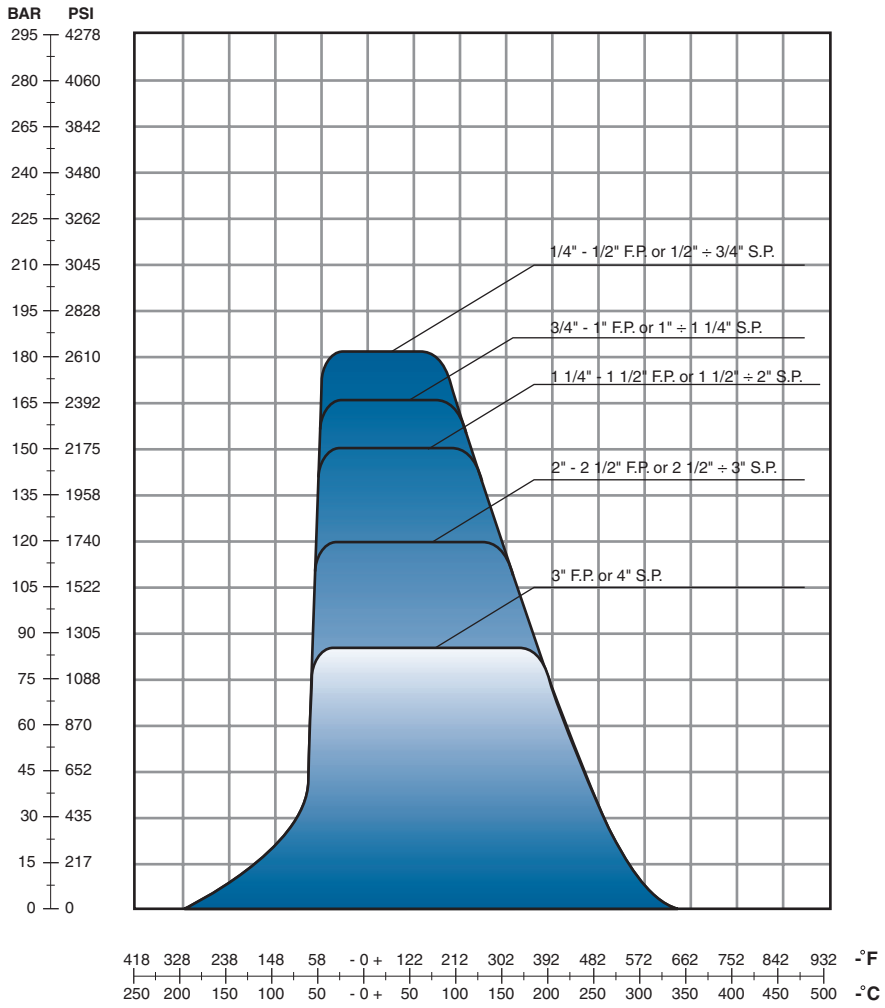

CV VALUES

Standard Port

SIZE	–	1/2″	3/4″	1″	1 1/4″	1 1/2″	2″	2 1/2″	3″	4″
Cv		8	13	32	48	82	120	275	460	700

Full Port

SIZE	1/4″	3/8″	1/2″	3/4″	1″	1 1/4″	1 1/2″	2″	2 1/2″	3″
Cv	8	8	12	30	45	78	115	265	445	680

SOFT PARTS

Repair Kit

P/N	QTY.	PART NAME	MATERIAL
3	1	Packing Ring	Graphite
7	1	Thrust Washer	RPTFE
8	1	Stem "O" Ring	Viton©
10	2	Seats	20% C – 5% Gr. Filled TFE
11	2	Body Seals	Carbon Filled TFE
18	2	Body Seals	Graphite

FLOW DATA Flow rates were determined for ball valves in fully open position and a water temperature of 60ºF (15ºC). Cv value is the full capacity flow rate through the ball valve in gallons/min. of water at 60ºF with a pressure of one PSI.

Pressure Limitations for D-Seat

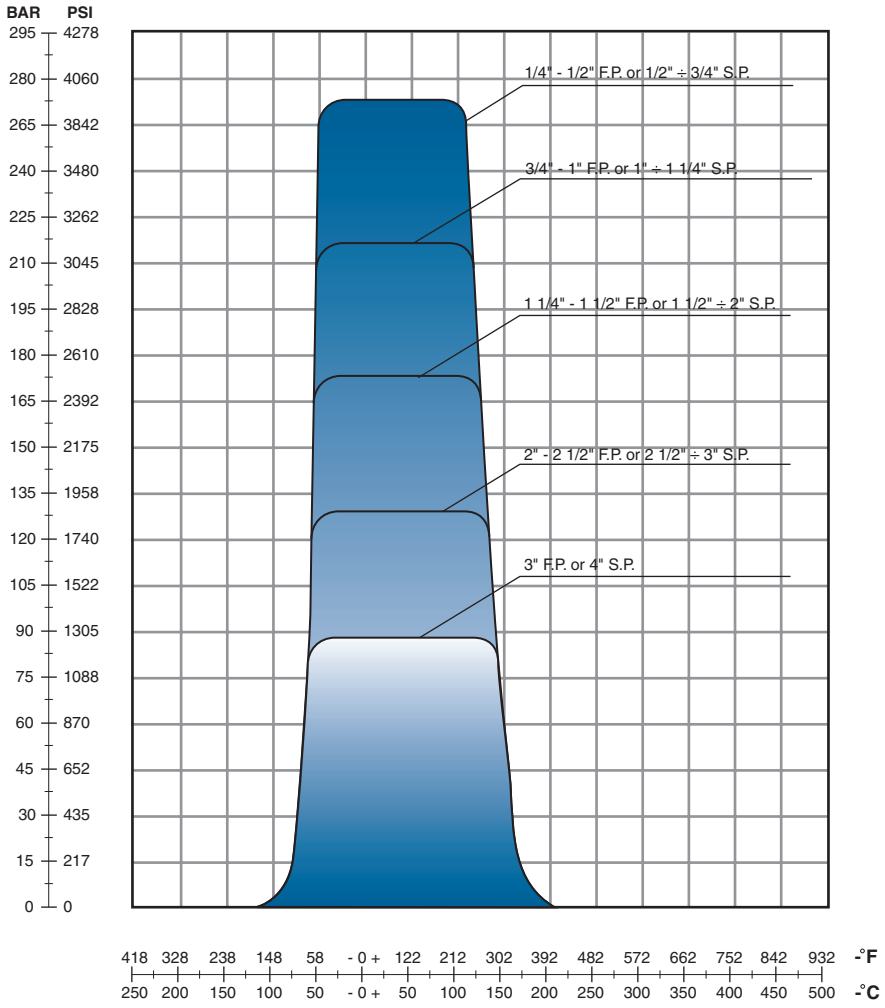

CV VALUES

Standard Port

SIZE	–	1/2″	3/4″	1″	1 1/4″	1 1/2″	2″	2 1/2″	3″	4″
Cv		8	13	32	48	82	120	275	460	700

Full Port

SIZE	1/4″	3/8″	1/2″	3/4″	1″	1 1/4″	1 1/2″	2″	2 1/2″	3″
Cv	8	8	12	30	45	78	115	265	445	680

SOFT PARTS

Repair Kit

P/N	QTY.	PART NAME	MATERIAL
3	1	Packing Ring	Graphite
7	1	Thrust Washer	RPTFE
8	1	Stem "O" Ring	Viton©
10	2	Seats	DEVLON® V
11	2	Body Seals	RTFE
18	2	Body Seals	Graphite

FLOW DATA Flow rates were determined for ball valves in fully open position and a water temperature of 60°F (15°C). Cv value is the full capacity flow rate through the ball valve in gallons/min. of water at 60°F with a pressure of one PSI.

Pressure Limitations for D-Seat

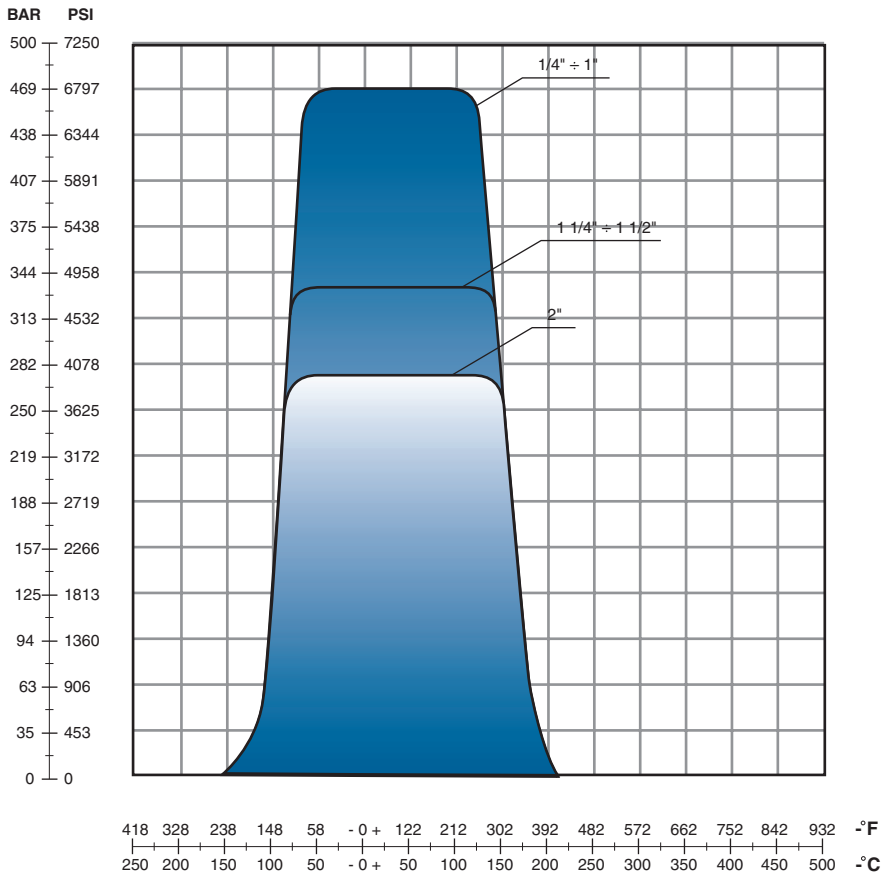

CV VALUES

Flow

VALVE SIZE	Cv
1/4″	8
3/8″	8
1/2″	8
3/4″	25
1″	34
1 1/4″	100
1 1/2″	100
2″	100

SOFT PARTS

Repair Kit

P/N	QTY.	PART NAME	MATERIAL
3	1	Packing Ring	Graphite
7	1	Thrust Washer	RPTFE
8	1	Stem "O" Ring	Viton©
10	2	Seats	DEVLON® V
11	2	Body Seals	Grafoil®
18	2	Body Seals	Viton©

FLOW DATA Flow rates were determined for ball valves in fully open position and a water temperature of 60ºF (15ºC). Cv value is the full capacity flow rate through the ball valve in gallons/min. of water at 60ºF with a pressure of one PSI.

Pressure Limitations for M-Seat

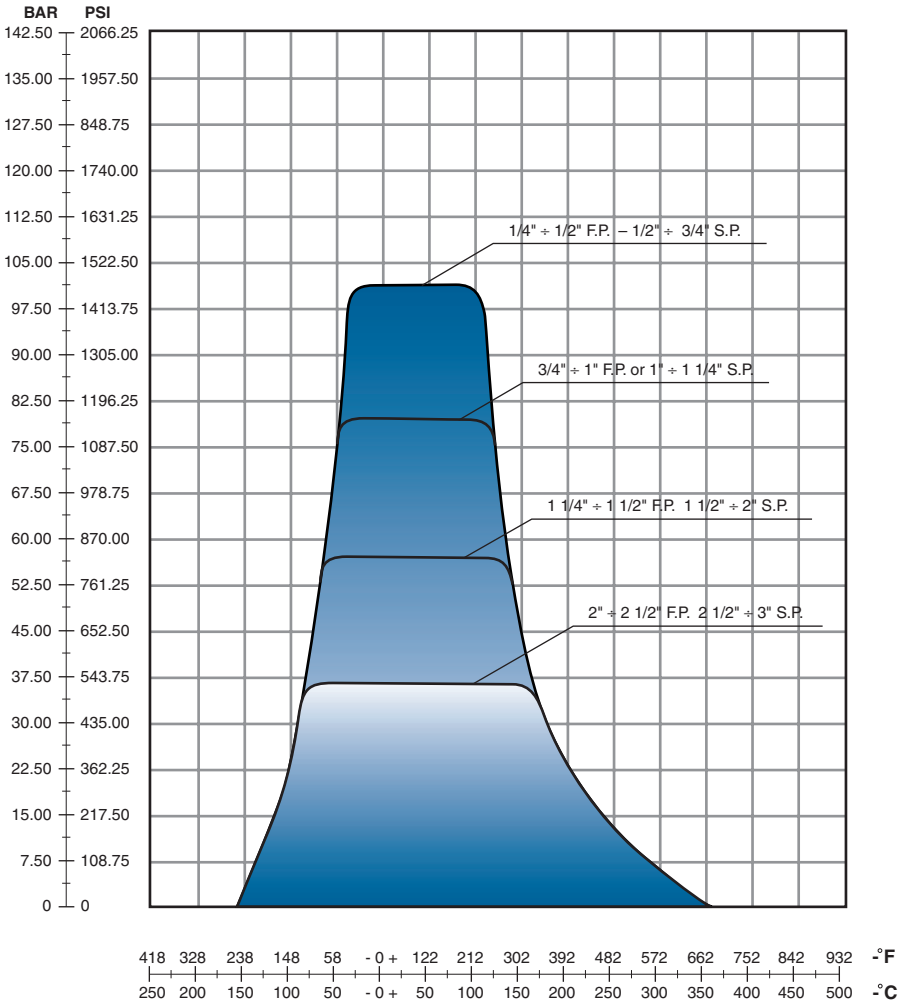

CV VALUES

Standard Port

SIZE	–	1/2″	3/4″	1″	1 1/4″	1 1/2″	2″	2 1/2″	3″
Cv	–	5.6	10.5	24.0	40.0	60.0	87.5	175.0	223.0

Full Port

SIZE	–	1/2″	3/4″	1″	1 1/4″	1 1/2″	2″	2 1/2″
Cv	–	–	10.5	24.0	40.0	60.0	87.5	175.0

1) When T-Port works like the 2-Way valves, please use Cv values for PBV5331/6331 (page 20-21) and deduct 50%.

VALID ONLY WHEN VALUES WORK IN HERE UNDER DESCRIBED CONDITIONS

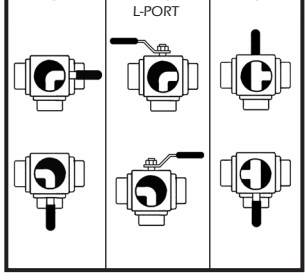

SOFT PARTS

Repair Kit

P/N	QTY.	PART NAME	MATERIAL
3	1	Packing Ring	Graphite
7	1	Thrust Washer	RPTFE
8	1	Stem "O" Ring	Viton©
10	2	Seats	DEVLON® V
11	2	Body Seals	RTFE
18	2	Body Seals	Graphite

FLOW DATA Flow rates were determined for ball valves in fully open position and a water temperature of 60ºF (15ºC). Cv value is the full capacity flow rate through the ball valve in gallons/min. of water at 60ºF with a pressure of one PSI.

Pressure Limitations for M-Seat

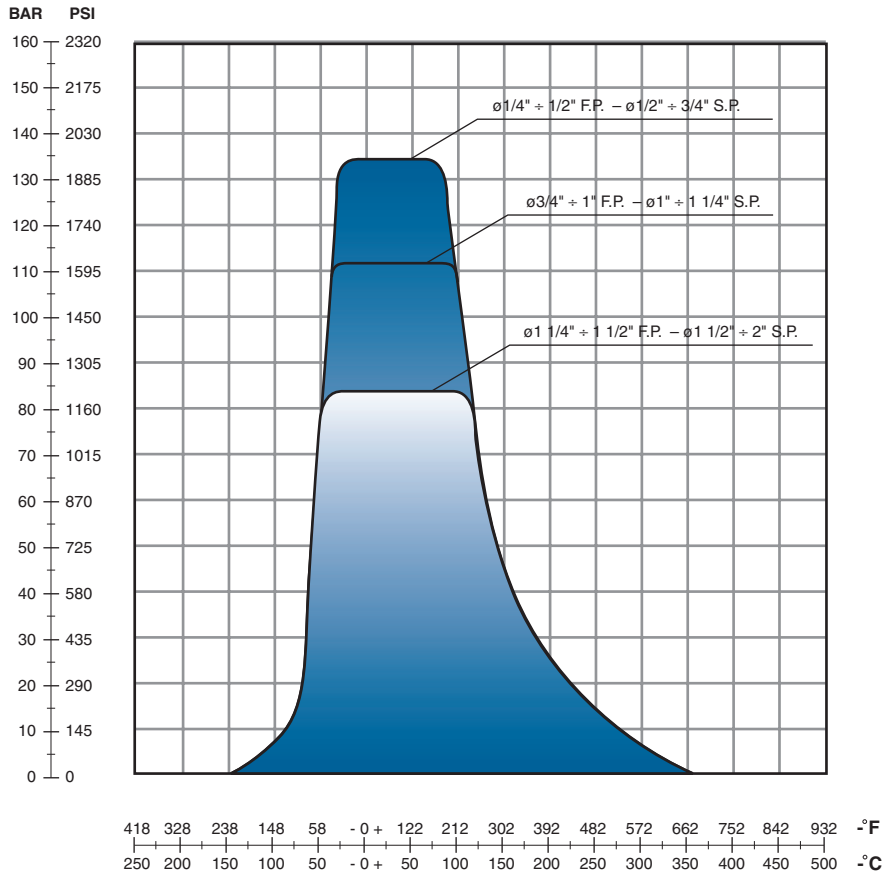

CV VALUES

Standard Port

SIZE	–	1/2"	3/4"	1"	1 1/4"	1 1/2"	2"	2 1/2"	3"
Cv	–	5.6	10.5	24.0	40.0	60.0	87.5	175.0	223.0

Full Port

SIZE	–	1/2"	3/4"	1"	1 1/4"	1 1/2"	2"	2 1/2"
Cv	–	5.6	10.5	24.0	40.0	60.0	87.5	175.0

1) When T-Port works like the 2-Way valves, please use Cv values for PBV5331/6331 (page 20-22) and deduct 50%.

VALID ONLY WHEN VALUES WORK IN HERE UNDER DESCRIBED CONDITIONS

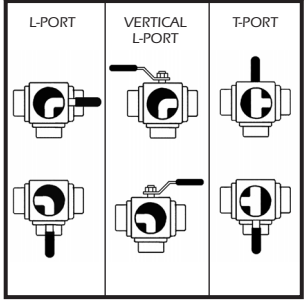

SOFT PARTS

Repair Kit

P/N	QTY.	PART NAME	MATERIAL
3	1	Packing Ring	Graphite
7	1	Thrust Washer	RPTFE
8	1	Stem "O" Ring	Viton©
10	2	Seats	DEVLON® V
11	2	Body Seals	RTFE
18	2	Body Seals	Graphite

FLOW DATA Flow rates were determined for ball valves in fully open position and a water temperature of 60ºF (15ºC). Cv value is the full capacity flow rate through the ball valve in gallons/min. of water at 60ºF with a pressure of one PSI.

Pressure Limitations for M-Seat

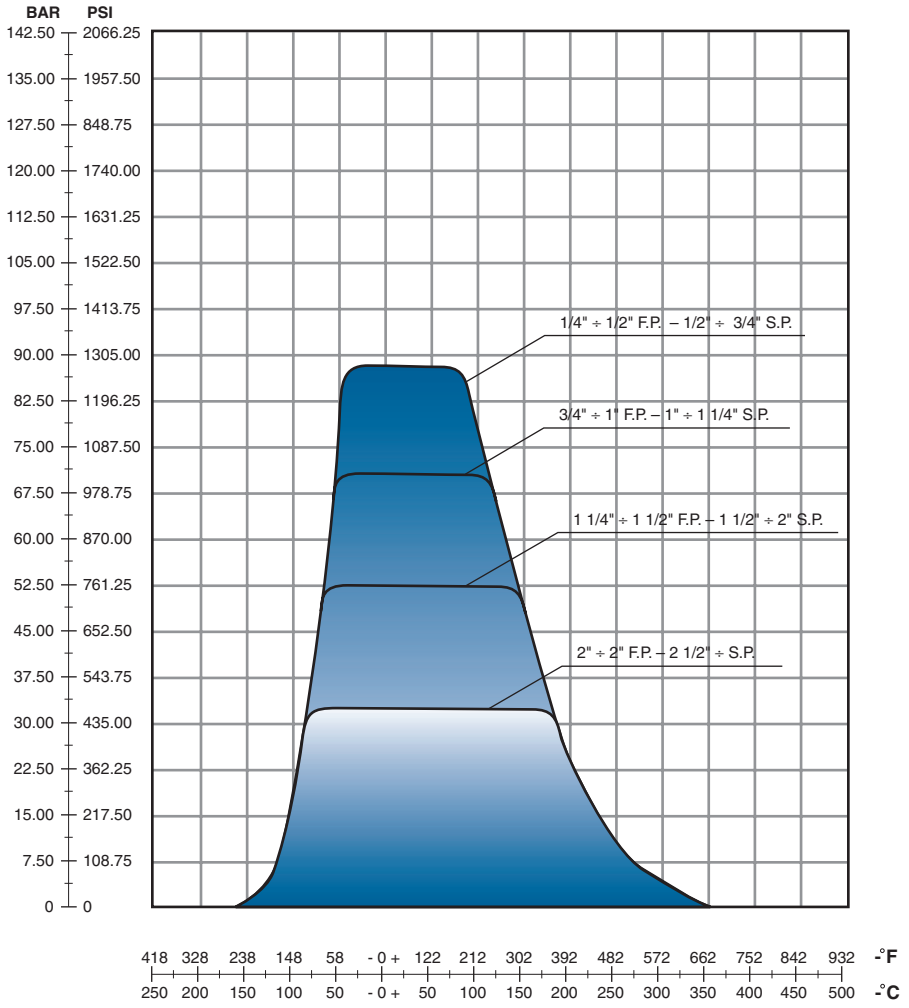

CV VALUES

SIZE	1/4"	3/8"	1/2"	3/4"	1"	1 1/4"	1 1/2"	2"	2 1/2"
Cv	2.8	2.8	2.8	9.5	22.0	36.0	60.0	90.0	164.0

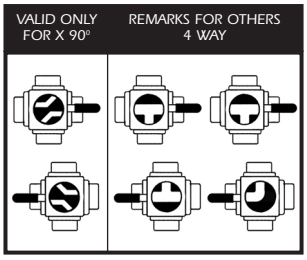

SOFT PARTS

Repair Kit

P/N	QTY.	PART NAME	MATERIAL
3	1	Packing Ring	Graphite
7	1	Thrust Washer	PTFE
8	1	Stem "O" Ring	Viton©
10	4	Seats	20% C – 5% Gr. Filled TFE
11	4	Body Seals	Graphite
18	4	Body Seals	Viton©

FLOW DATA Flow rates were determined for ball valves in fully open position and a water temperature of 60°F (15°C). Cv value is the full capacity flow rate through the ball valve in gallons/min. of water at 60°F with a pressure of one PSI.

ALL MOUNTING - PER ISO 5211

FIGURE A

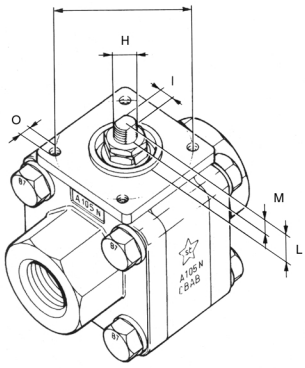

FIGURE B

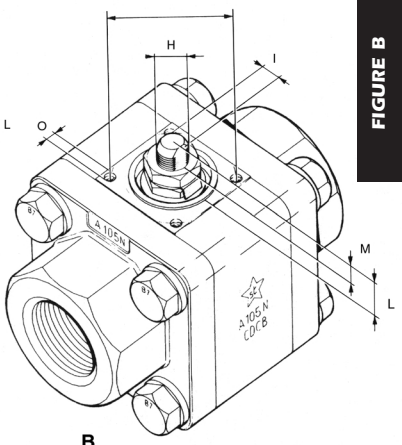

	VALVE SIZE		DIMENSIONS (inch)						ISO 5211
	F.B.	R.B.	H	I	L	M	N	O	
FIGURE A	1/4″	–	M10x1	0.21	0.19	0.19	1.41	M5x8	F03
	3/8″	1/2″	M10x1	0.21	0.19	0.19	1.41	M5x8	F03
	1/2″	3/4″	M10x1	0.21	0.19	0.19	1.41	M5x8	F03
	3/4″	1″	M12x1.25	0.29	0.55	0.35	1.65	M5x8	F04
FIGURE B	1″	1 1/4″	M12x1.25	0.29	0.78	0.39	1.65	M5x8	F04
	1 1/4″	1 1/2″	M15x1.5	0.35	1.06	0.51	1.96	M6x10	F05
	1 1/2″	2″	M15x1.5	0.35	1.10	0.55	1.96	M6x10	F05
	2″	2 1/2″	M15x1.5	0.35	0.89	0.49	1.96	M6x10	F05
	2 1/2″	3″	M22x1.5	0.62	1.37	0.66	2.75	M8x12	F07
	3″	4″	M24x1.5	0.70	1.47	0.59	2.75	M8x12	F07

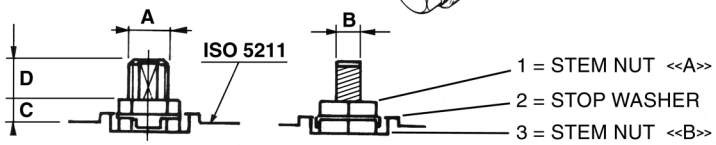

	VALVE SIZE		DIMENSIONS (inch)				ISO 5211
	F.B. size	R.B. size	A	B	C	D	
FIGURE A	1/4″	–	M 10 x 1	5.5	1	5	F03
	3/8″	1/2″	M 10 x 1	5.5	1	5	F03
	1/2″	3/4″	M 10 x 1	5.5	1	5.5	F03
	3/4″	1″	M 12 x 1.25	7.5	5.5	6.5	F04
FIGURE B	1″	11/4″	M 12 x 1.25	7.5	13	9	F04
	11/4″	11/2″	M 15 x 1.5	8.9	16	12	F05
	11/2″	2″	M 15 x 1.5	8.9	16	12	F05

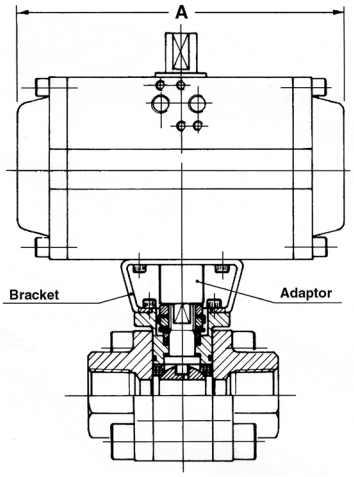

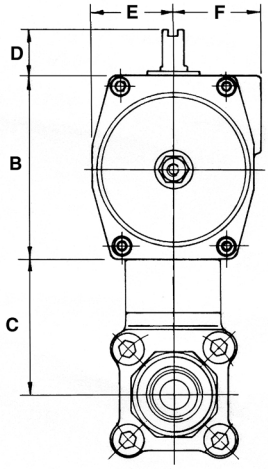

VALVE/ACTUATOR SELECTION
THE TABLE REFERS TO AIR TORQUE ACTUATORS

With constant air supply of (80 PSI). For lower air supply consult Air Torque Cat.

VALVE SIZE		DOUBLE ACTING ACTUATOR						ACTUATOR TYPE	SPRING ACTING ACTUATOR						ACTUATOR TYPE
Full Port	Reg. Port	Dimensions							Dimensions						
size	size	A	B	C	D	E	F		A	B	C	D	E	F	
1/4	-	6.00	2.56	3.27	0.79	1.44	1.73	AT10 DA	6.00	2.56	3.27	0.79	1.44	1.73	AT10 SR
3/8	1/2	6.00	2.56	3.27	0.79	1.44	1.73	AT10 DA	6.00	2.56	3.27	0.79	1.44	1.73	AT10 SR
1/2	3/4	6.00	2.64	3.27	0.79	1.44	1.73	AT10 DA	8.00	2.64	3.94	0.79	1.67	1.93	AT20 SR
3/4	1	6.00	2.87	3.27	0.79	1.44	1.73	AT10 DA	8.00	2.87	3.94	0.79	1.67	1.93	AT20 SR
1	1 1/4	8.00	2.87	3.94	0.79	1.67	1.93	AT20 DA	9.00	2.87	4.33	0.79	1.93	2.09	AT25 SR
1 1/4	1 1/2	8.00	3.23	3.94	0.79	1.67	1.93	AT20 DA	10.75	3.23	4.92	0.79	2.17	2.48	AT30 SR
1 1/2	2	8.00	3.39	3.94	0.79	1.67	1.93	AT20 DA	10.75	3.39	4.92	0.79	2.17	2.48	AT30 SR
2	2 1/2	9.00	3.82	4.33	0.79	1.93	2.09	AT25 DA	10.75	3.82	4.92	0.79	2.17	2.48	AT30 SR
2 1/2	3	10.75	4.53	4.92	0.79	2.17	2.48	AT30 DA	14.25	4.53	6.10	1.18	2.76	2.87	AT40 SR
3	4	10.75	5.20	4.92	0.79	2.17	2.48	AT30 DA	14.25	5.20	6.10	1.18	2.76	2.87	AT40 SR

SPECIAL NOTE: These mountings do not apply to three-way and four-way valves. Contact customer service for technical assistance.

BREAK TORQUES IN INCH/LBS.

Standard Port

Valve Size	5333 (A)	5331 (A)		5338 (A)	5339 (A)
–	M	M	D	M	M
1/2″	104	104	135	160	160
3/4″	138	138	179	254	254
1″	207	207	269	372	372
1 1/4″	287	287	373	425	425
1 1/2″	346	346	450	532	532
2″	403	403	524	637	637
2 1/2″	–	576	749	956	956
3″	–	863	1122	1169	1169
4″	–	1036	1347	–	–

Full Port

Valve Size	6333 (A)	6331 (A)		6336 (C)	6338 (A)	6339 (A)
–	M	M	D	D	M	M
1/4″	104	104	135	159	160	160
3/8″	104	104	135	159	160	160
1/2″	138	138	179	159	254	254
3/4″	207	207	269	266	372	372
1″	287	287	373	398	425	425
1 1/4″	346	346	450	886	532	532
1 1/2″	406	403	524	886	637	637
2″	–	576	749	1150	956	956
2 1/2″	–	863	1122	–	1169	1169
3″	–	1036	1347	–	–	–

Notes:

A. Torques listed are max. 50 bar (725 psig) differential pressure in Clean Service.
Application Factors:
Deduct 25% for high lubricity service.
Add 15% for dry gas or demineralized water.
Add 20% for slurry or abrasive service.

B. Torques listed are for Clean Service (liquid or wet gas) up to 64 bar (928 psig) differential pressure, operated at least once a week.
Temperatures of -200C to +280C (-40F to 820F)
For severe service, torques increase for seats as below:
Seats in M: +50%
Seats in T: +15%

C. Torques listed are at 200 bar (2900 psig).

Represented by:

ZY-TECH GLOBAL INDUSTRIES

10600 Corporate Drive, Stafford, Texas 77477
(281)565-1010 (800)231-3530
Sales Fax: (281)565-3171 Email: sales@zy-tech.com
Website: www.zy-tech.com

PBV-T&SWBV-04/02